# INSTALLATION INSTRUCTIONS

## FIREPLACE STOVE FOR WOOD

**It is recommended that the installation of the fireplace stove for wood and surround is completed by suitably qualified person. The manufacturer is only responsible for the stove. We wish to remind those responsible for carrying out the installation that all materials used for installing, insulating and connecting and all the build and connect procedures must conform to current national and European standards.**
**The fireplace stove should only be placed in a situation where there is no danger in terms of the construction, positioning and use of the appliance.**
**The fireplace stove is a device that requires a constant supply of fresh air for its operation. It is necessary to provide a sufficient amount of air at the place of construction over a lifetime and a suitable pressure drop that will not affect other equipment located in the building or room.**
**The fireplace stove must be positioned so as to allow cleaning of the stove, flue and chimney. Air inlet and outlet grilles have to be so positioned, that they are not liable to becoming blocked or closed off accidentally.**
**The appliance is not suitable for installation in a shared flue system.**
**For the type of appliance, model number, specifications, dimensions and other necessary data see the technical data sheet.**
**Chimney, construction hearth, recesses and heat intake openings must conform to the technical data according to the attached technical data sheet.**
**Fuel: wood, wood briquettes.**

**Installation instructions:**

**Caution!!! To avoid any risk of fire, this appliance must be installed according to the local regulations in force, including those of national and European standards and in accordance with Decree of the Ministry of the Interior of the SR No 401/2007 Coll., on technical specifications and requirements for fire safety during the installation and operation of fuel appliances, electrical heating appliances, and central heating equipment, and during the construction and use of chimneys and flue gas ducting, and on their cleaning and inspection schedules, as well as EN 1443, EN 16510-2-1 and EN 16250,**

**Transportation:**

The protective film and the transporting pallet should be removed at the building site before installation. Carrying handles can be released from the protective film.
After removing the protective film visually inspect all parts of the fireplace stove. Please follow any further instructions if included.

**Installation of the fireplace stove :**

The floor must be non-flammable, flat and able to withstand the load. Secure the floor at the storage location is capable of supporting the weight of the appliance. If an existing construction does not meet this prerequisite, suitable measures shall be taken to archieve it. In the vicinity of the fireplace, it is not permitted to lay under floor heating , water, electricity and so on.The floor surrounding the fireplace must be constructed from a non-combustible material (ceramics, stone , etc.) - and at least 600 mm to the front and 300 mm at the sides of the stove.
The room in which the appliance will be installed must have a minimum of 60 m3 and, when using a ventilation system or extraction, a safety switch that automatically switches off the ventilation or extraction in the event of a fault. The appliance must not be installed with ventilation systems that have a negative pressure lower than -15 Pa. The appliance must not be installed in rooms where there are devices that permanently create negative pressure during their operation /e.g. production halls/. The combustion air supply must be ensured through the floor, walls or a chimney designated for this purpose /e.g. EN 13063-3/. The air supply must have a cross-section at least as

large as the appliance connection opening, must be made of a material resistant to moisture and cold, a length of at least 2 m, max. 15 m with as few bends as possible. It must have a tight shut-off valve accessible from the room. It is connected to the appliance with a metal air hose with a diameter and location according to the appliance's technical sheet. The chimney, flues and air supply must be sufficiently tight and suitable for operation independent of room air.
Remove the rear cover and cover frame mounted with screws from the fireplace stove.
Remove the remaining covers mounted with screws and the heat storage panels.
Remove the stove from the pallet and place it so that the distance from the wall made of flammable materials is at least according to the technical data of the stove. Convection air flow takes place in the gaps created.
Level the fireplace stove with the adjustment screws and secure the position with a nut on the screw.
Install the covers and heat storage panels in the reverse order.

The paint used on top of the appliance is ecologically friendly, water based and free from harmful substances. During construction, make sure to avoid prolonged, direct contact with harmful chemicals, detergents, adhesives, solvents and protective tape, all of which can cause damage. Always use masking tape designed for interior to protect the paint on the stove. If you suspect that the fireplace stove has been exposed to a harmful substance, rinse it with clean water.
For efficient and continuous operation of the stove, taking into account its high output, it is necessary to ensure humidification of the indoor air.

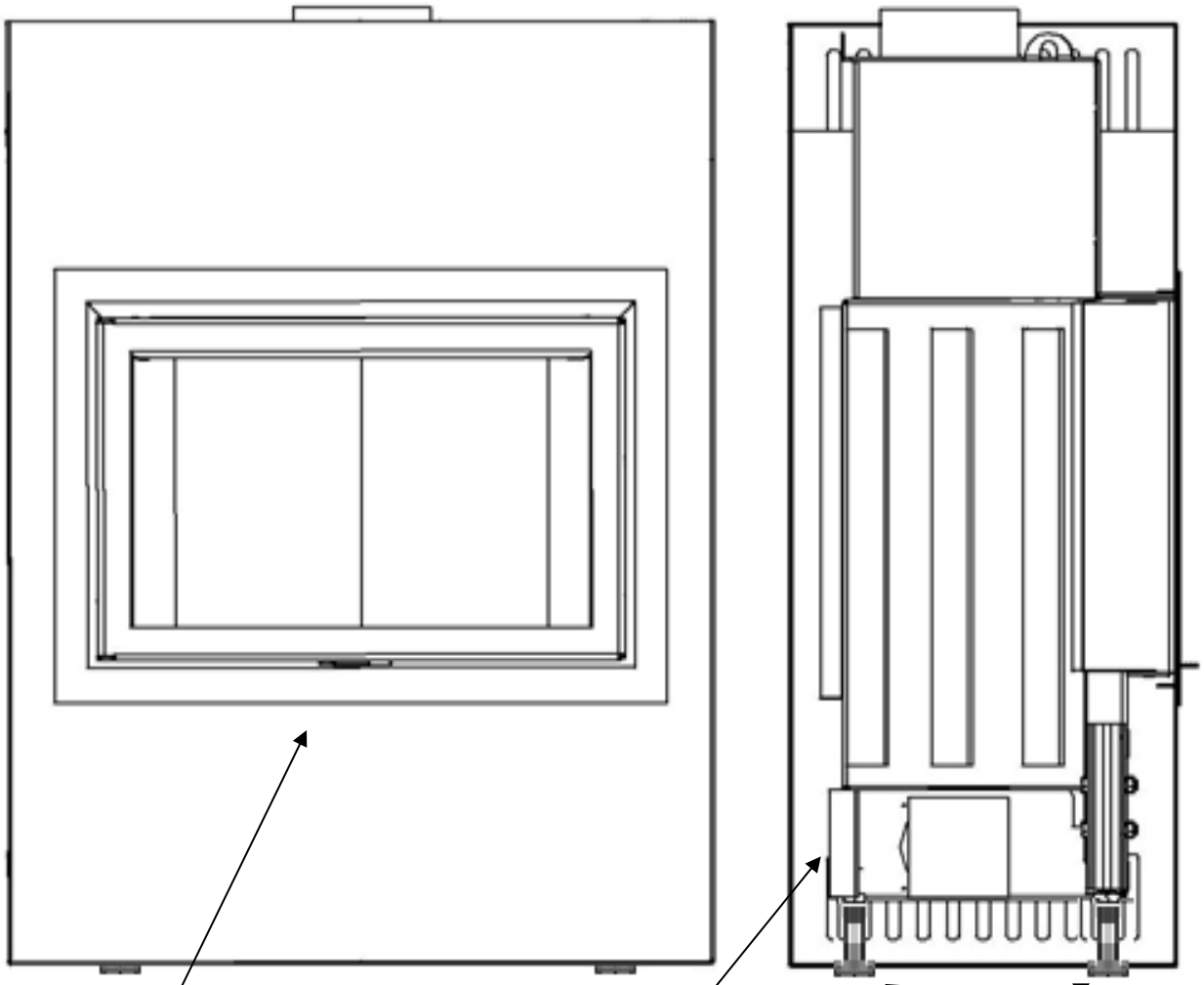

Air Control
- **left : max.opening / lighting the fire**
- **right : closed**

. Air intake for combustion from outside or brought to the base.

Adjustment screws to fit the stove into a desired position.

**Chimney Installations**

The chimney have to meet the requirements of EN 15287-1:2007+A1:2010, EN 15287-2:2008, EN 13384-1:2015+A1:2019. The correct function of the chimney have to be demonstrated according to EN 13384-1:2015+A1:2019.
For connecting the fireplace stove to the chimney, use steel pipes and elbows . Pursuant to § 14 , Article 1, letter h , Act no. 314/2001 Coll. - regarding fire protection: the owner is obliged to ensure that all chimneys are examined by an authorised expert before connecting to the chimney.
After examination of the chimney and connection of the appliance, the inspector will issue a certificate called: 'The Confirmation of Chimney Examination'. This is a statement regarding the state of chimney and flue in terms of safety and reliability of operation.
After connecting the insert to the chimney, make a fire to check for the smoke and to test the functionality of the components ( combustion control, seal, tightness of the door ... ) .

**Preparing the stove for first usage.**

Check the operation of the movable parts : doors , air supply lever, grate and ash pan.
Remove any transport securing devices, labels from glass and accompanying accessories from the firebox and ash pan.

**Safety regulations**

Flue pipes may only be installed at a safe distance from surrounding flammable building structures. The safe distance of solid fuel appliances and flue pipes from flammable materials in all directions is specified in the stove's technical data sheet.
The flue must be put together and fixed so that it is not accidentally or spontaneously released. Flue pipes with spigot and socket joints should be fitted with the socket facing upwards in the direction of the flue draught.
The Flue pipe connected to the chimney with a natural up draught needs to slope up at the shortest distance and at an angle at least 10% in the direction of draught.
A flue pipe longer than 2 000 mm must be firmly anchored. If the flue pipe is longer than 3 000 mm its resistance to heat must be at least the same as the resistance to heat of the flue liner, to which the flue is connected. (EN 73 0542 - Thermal performance of technological structures and buildings. Properties of materials and structures.)
If the flue pipe passes through the building structure, which contains combustible materials, or the surface is treated with combustible materials, you need to comply with the Decree of the Ministry of the Interior of the SR No 401/2007 Coll. Chimneys should be constructed with liners.
The smallest permissible active height of the chimney, i.e. the vertical distance from the flue (the place where the flue enters the chimney body) to the end of the chimney above the roof of the building, is recommended by the manufacturer according to the size of the fireplace and the conditions where the building is located.. If you want to connect the fireplace stove to the chimney with an active height of less than 5 m, it is recommended to consult with experts in the field - either with an approved inspector, or a designer of the chimney units.

**Disposal at end of life:**

The fireplace stove does not contain material that is known to be harmful to health. Divide it into three parts that can be recycled as non-hazardous waste according to Decree of the Ministry of the Enviroment of the SR No 365/215 Coll.:

1. Internal brickwork, non-metallic deflectors - Group, subgroup, type and subspecies of waste 16 11 06 / brickwork and refractory materials from non-metallurgical processes not containing known hazardous substances /
2. Glass - Group, subgroup, type and subspecies of waste 17 02 02 / glass /
3. Others - Group, subgroup, type and subspecies of waste 17 04 05 / iron and steel /

**Additional information in order to achieve relevant test results**:
Mass of the basic firebed 0,3-0,4 kg
The criterion for the end of the test cycle – amount of $CO_2$

**We recommend using the fireplace stove with accessories as supplied by the manufacturer.**

Examples of the positioning of noncombustible wall shield for the appliance or flue pipe

**PRÍKLAD UMIESTNENIA OCHRANNEJ CLONY SPOTREBIČA ALEBO DYMOVODU**

Rozmery v mm

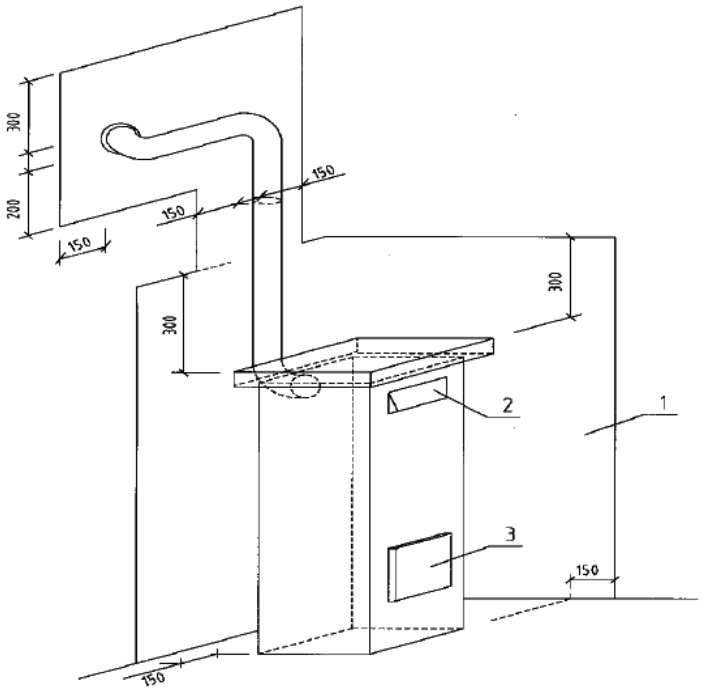


Vysvetlivky:
1 – ochranná clona spotrebiča alebo dymovodu chrániaca okolité stavebné konštrukcie triedy reakcie na oheň B, C, D, E alebo F
2 – prikladací otvor
3 – popolníkový otvor

Legend:
1. noncombustible wall shield for the appliance or flue pipe for construction materials in the vicinity fire rated B,C,D,E or F
2. stoking opening
3. 3.ash tray opening